# MP100D


| | | | |
|---|---|---|---|
| EN | Cordless Inflator | INSTRUCTION MANUAL | 4 |
| FR | Gonfleur sans fil | MANUEL D'INSTRUCTIONS | 10 |
| DE | Akku Kompressor | BETRIEBSANLEITUNG | 17 |
| IT | Gonfiatore a batteria | ISTRUZIONI PER L'USO | 25 |
| NL | Acculuchtpomp | GEBRUIKSAANWIJZING | 32 |
| ES | Inflador Inalámbrico | MANUAL DE INSTRUCCIONES | 39 |
| PT | Compressor a Bateria | MANUAL DE INSTRUÇÕES | 46 |
| DA | Akku pumpe | BRUGSANVISNING | 53 |
| EL | Φορητή τρόμπα | ΕΓΧΕΙΡΙΔΙΟ ΟΔΗΓΙΩΝ | 59 |
| TR | Akülü Hava Pompası | KULLANMA KILAVUZU | 67 |
| SV | Batteridriven uppblåsningsenhet | BRUKSANVISNING | 73 |
| NO | Trådløs pumpe | BRUKSANVISNING | 79 |
| FI | Akkukäyttöinen täyttöpumppu | KÄYTTÖOHJE | 85 |
| LV | Akumulatora pumpis | LIETOŠANAS INSTRUKCIJA | 91 |
| LT | Akumuliatorinis oro kompresorius | NAUDOJIMO INSTRUKCIJA | 98 |
| ET | Akupump | KASUTUSJUHEND | 105 |
| PL | Minikompresor akumulatorowy | INSTRUKCJA OBSŁUGI | 111 |
| HU | Akkumulátoros pumpa | HASZNÁLATI KÉZIKÖNYV | 118 |
| SK | Akumulátorový kompresor | NÁVOD NA OBSLUHU | 125 |
| CS | Akumulátorový kompresor | NÁVOD K OBSLUZE | 132 |
| SL | Akumulatorska zračna tlačilka | NAVODILA ZA UPORABO | 138 |
| SQ | Pompë me bateri | MANUALI I PËRDORIMIT | 144 |
| BG | Акумулаторен компресор | РЪКОВОДСТВО ЗА ЕКСПЛОАТАЦИЯ | 151 |
| HR | Bežični uređaj za napuhavanje | PRIRUČNIK S UPUTAMA | 159 |
| MK | Безжичен компресор | УПАТСТВО ЗА УПОТРЕБА | 165 |
| SR | Бежична пумпа | УПУТСТВО ЗА УПОТРЕБУ | 172 |
| RO | Compresor cu acumulator | MANUAL DE INSTRUCŢIUNI | 179 |
| UK | Акумуляторний насос | ІНСТРУКЦІЯ З ЕКСПЛУАТАЦІЇ | 186 |
| RU | Аккумуляторный Насос | РУКОВОДСТВО ПО ЭКСПЛУАТАЦИИ | 194 |
| ZHCN | 充电式充气机 | 使用说明书 | 202 |

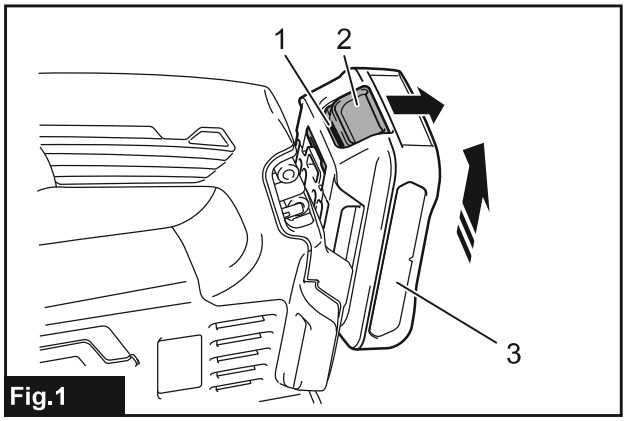

Fig.1

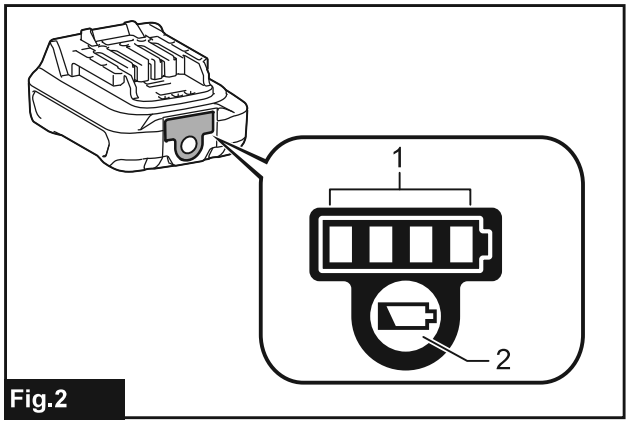

Fig.2

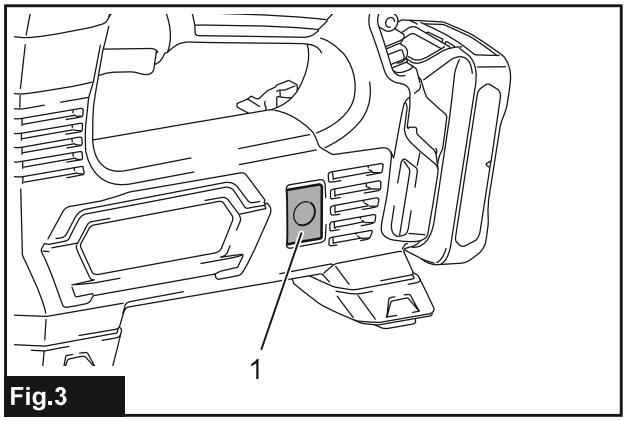

Fig.3

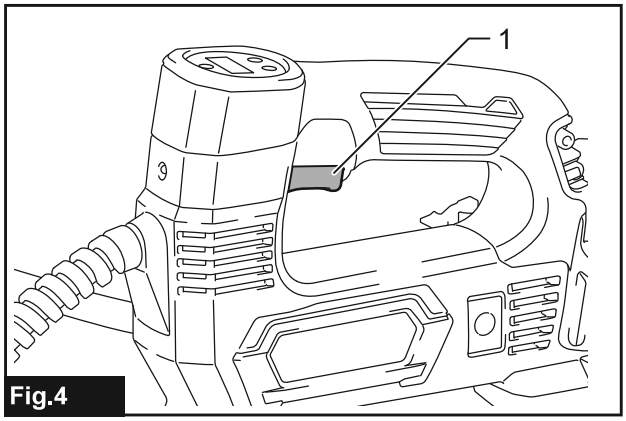

Fig.4

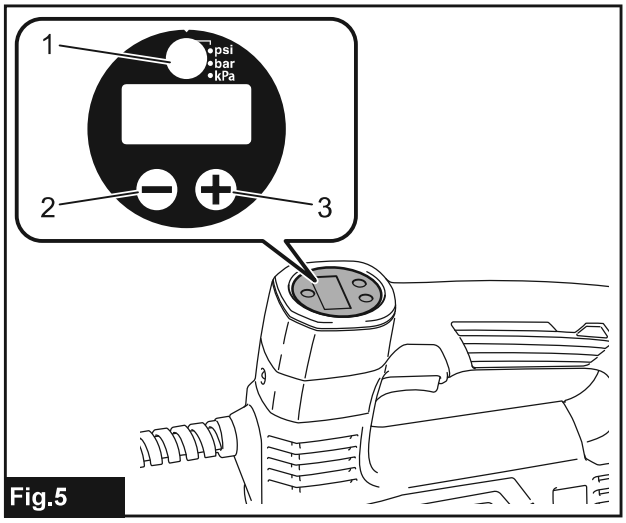

Fig.5

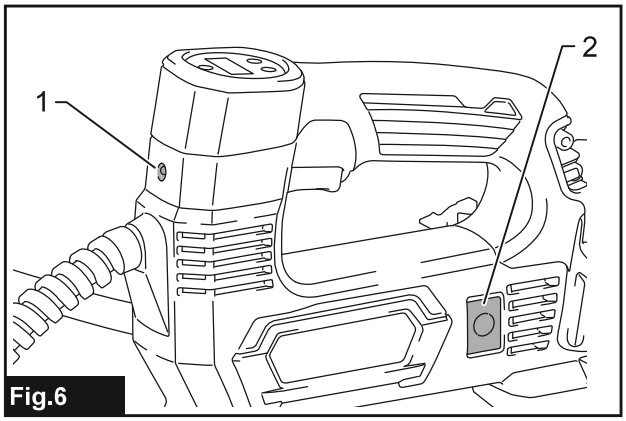

Fig.6

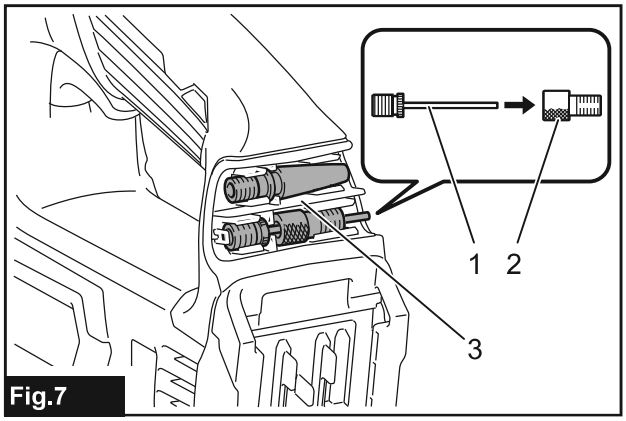

Fig.7

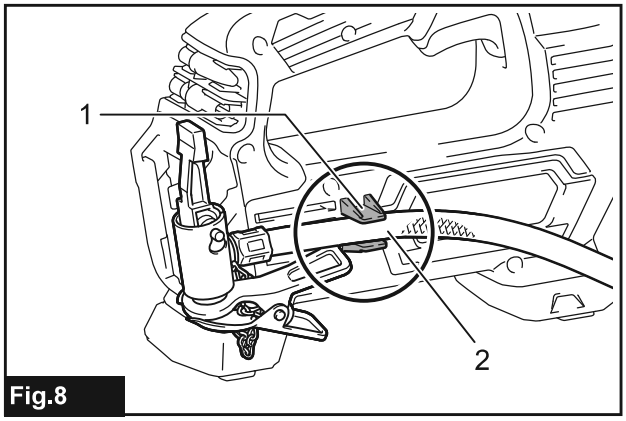

Fig.8

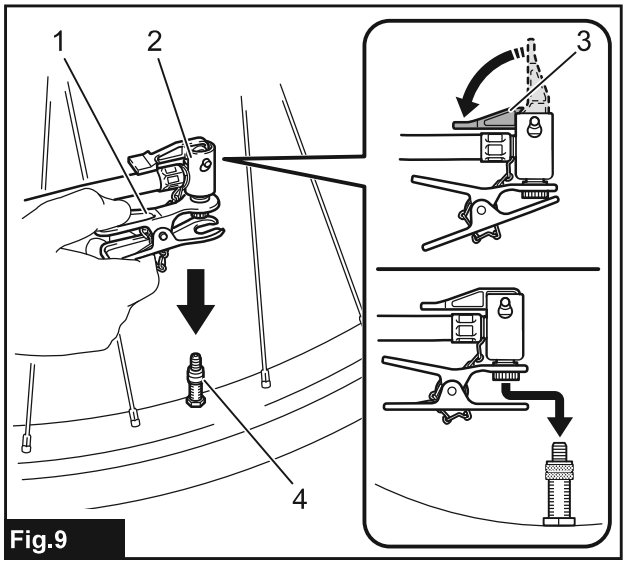

Fig.9

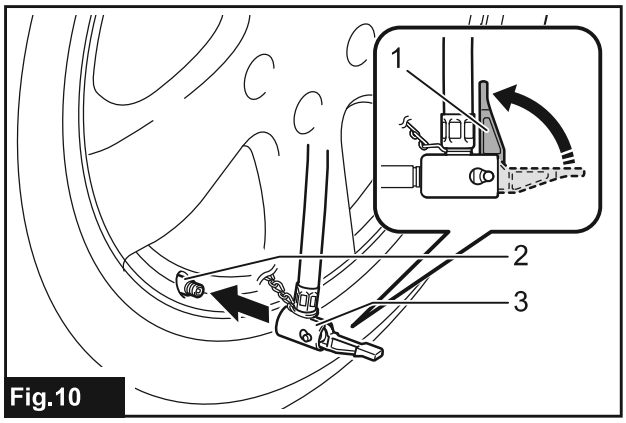

Fig.10

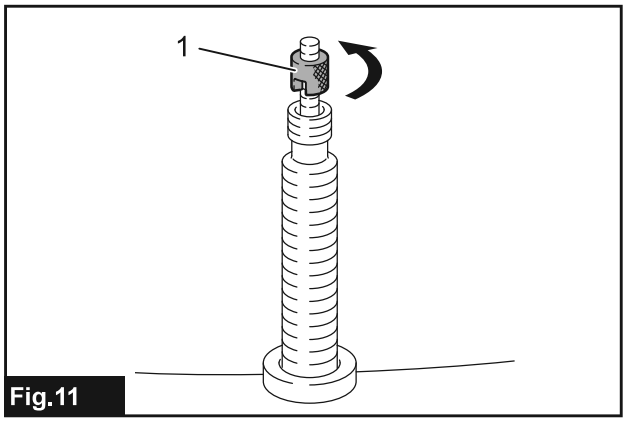

Fig.11

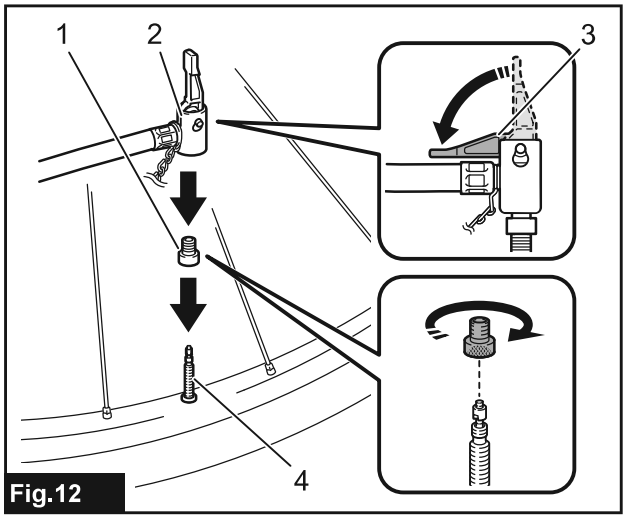

Fig.12

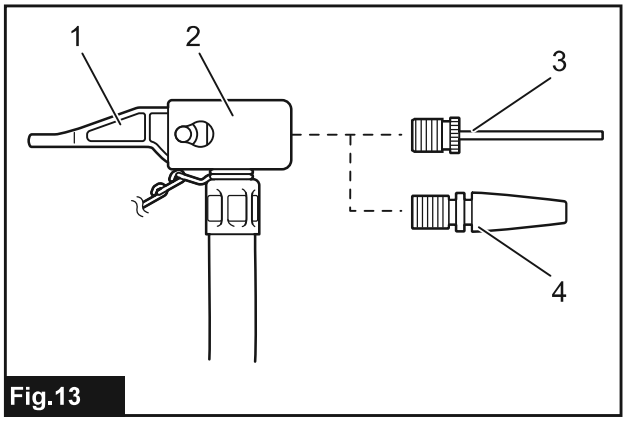

Fig.13

# SPECIFICATIONS

| Model: | MP100D |
|---|---|
| Overall length | 235 mm - 255 mm |
| Maximum air pressure | 121 PSI / 830 kPa |
| Duty cycle | 5 minutes On / 5 minutes Off |
| Rated voltage | D.C. 10.8 V - 12 V max |
| Net weight | 1.2 - 1.3 kg |

- Due to our continuing program of research and development, the specifications herein are subject to change without notice.
- Specifications and battery cartridge may differ from country to country.
- The weight may differ depending on the attachment(s), including the battery cartridge. The lightest and heaviest combination, according to EPTA-Procedure 01/2014, are shown in the table.

## Applicable battery cartridge and charger

| | |
|---|---|
| Battery cartridge | BL1016 / BL1021B / BL1041B |
| Charger | DC10SB / DC10WD / DC18RE |

- Some of the battery cartridges and chargers listed above may not be available depending on your region of residence.

⚠***WARNING:*** **Only use the battery cartridges and chargers listed above.** Use of any other battery cartridges and chargers may cause injury and/or fire.

## Symbols

The followings show the symbols used for the equipment. Be sure that you understand their meaning before use.

| | |
|---|---|
|  | Read instruction manual. |
|  | Risk of bursting. |
|  Ni-MH Li-ion | Only for EU countries<br>Due to the presence of hazardous components in the equipment, waste electrical and electronic equipment, accumulators and batteries may have a negative impact on the environment and human health.<br>Do not dispose of electrical and electronic appliances or batteries with household waste!<br>In accordance with the European Directive on waste electrical and electronic equipment and on accumulators and batteries and waste accumulators and batteries, as well as their adaptation to national law, waste electrical equipment, batteries and accumulators should be stored separately and delivered to a separate collection point for municipal waste, operating in accordance with the regulations on environmental protection.<br>This is indicated by the symbol of the crossed-out wheeled bin placed on the equipment. |

## Intended use

This tool is intended for inflating tire, sport ball, or small floating tube.

## Noise

The typical A-weighted noise level determined according to EN60745-1:
Sound pressure level ($L_{pA}$) : 72 dB(A)
Uncertainty (K) : 3 dB(A)

The noise level under working may exceed 80 dB (A).

**NOTE:** The declared noise emission value(s) has been measured in accordance with a standard test method and may be used for comparing one tool with another.

**NOTE:** The declared noise emission value(s) may also be used in a preliminary assessment of exposure.

⚠***WARNING:*** **Wear ear protection.**

⚠***WARNING:*** **The noise emission during actual use of the power tool can differ from the declared value(s) depending on the ways in which the tool is used especially what kind of workpiece is processed.**

⚠***WARNING:*** **Be sure to identify safety measures to protect the operator that are based on an estimation of exposure in the actual conditions of use (taking account of all parts of the operating cycle such as the times when the tool is switched off and when it is running idle in addition to the trigger time).**

## Vibration

The vibration total value (tri-axial vector sum) determined according to EN60745-1:
Work mode: Inflating (830 kPa)
Vibration emission ($a_h$) : 3.8 $m/s^2$
Uncertainty (K) : 1.5 $m/s^2$

**NOTE:** The declared vibration total value(s) has been measured in accordance with a standard test method and may be used for comparing one tool with another.

**NOTE:** The declared vibration total value(s) may also be used in a preliminary assessment of exposure.

***WARNING:*** **The vibration emission during actual use of the power tool can differ from the declared value(s) depending on the ways in which the tool is used especially what kind of workpiece is processed.**

***WARNING:*** **Be sure to identify safety measures to protect the operator that are based on an estimation of exposure in the actual conditions of use (taking account of all parts of the operating cycle such as the times when the tool is switched off and when it is running idle in addition to the trigger time).**

## EC Declaration of Conformity

***For European countries only***

The EC declaration of conformity is included as Annex A to this instruction manual.

# SAFETY WARNINGS

## General power tool safety warnings

***WARNING:*** **Read all safety warnings, instructions, illustrations and specifications provided with this power tool.** Failure to follow all instructions listed below may result in electric shock, fire and/or serious injury.

## Save all warnings and instructions for future reference.

The term "power tool" in the warnings refers to your mains-operated (corded) power tool or battery-operated (cordless) power tool.

**Work area safety**

1. **Keep work area clean and well lit.** Cluttered or dark areas invite accidents.
2. **Do not operate power tools in explosive atmospheres, such as in the presence of flammable liquids, gases or dust.** Power tools create sparks which may ignite the dust or fumes.
3. **Keep children and bystanders away while operating a power tool.** Distractions can cause you to lose control.

**Electrical Safety**

1. **Power tool plugs must match the outlet. Never modify the plug in any way. Do not use any adapter plugs with earthed (grounded) power tools.** Unmodified plugs and matching outlets will reduce risk of electric shock.
2. **Avoid body contact with earthed or grounded surfaces, such as pipes, radiators, ranges and refrigerators.** There is an increased risk of electric shock if your body is earthed or grounded.
3. **Do not expose power tools to rain or wet conditions.** Water entering a power tool will increase the risk of electric shock.
4. **Do not abuse the cord. Never use the cord for carrying, pulling or unplugging the power tool. Keep cord away from heat, oil, sharp edges or moving parts.** Damaged or entangled cords increase the risk of electric shock.
5. **When operating a power tool outdoors, use an extension cord suitable for outdoor use.** Use of a cord suitable for outdoor use reduces the risk of electric shock.
6. **If operating a power tool in a damp location is unavoidable, use a residual current device (RCD) protected supply.** Use of an RCD reduces the risk of electric shock.
7. **Power tools can produce electromagnetic fields (EMF) that are not harmful to the user.** However, users of pacemakers and other similar medical devices should contact the maker of their device and/or doctor for advice before operating this power tool.

**Personal Safety**

1. **Stay alert, watch what you are doing and use common sense when operating a power tool. Do not use a power tool while you are tired or under the influence of drugs, alcohol or medication.** A moment of inattention while operating power tools may result in serious personal injury.
2. **Use personal protective equipment. Always wear eye protection.** Protective equipment such as a dust mask, non-skid safety shoes, hard hat or hearing protection used for appropriate conditions will reduce personal injuries.
3. **Prevent unintentional starting. Ensure the switch is in the off-position before connecting to power source and/or battery pack, picking up or carrying the tool.** Carrying power tools with your finger on the switch or energising power tools that have the switch on invites accidents.
4. **Remove any adjusting key or wrench before turning the power tool on.** A wrench or a key left attached to a rotating part of the power tool may result in personal injury.
5. **Do not overreach. Keep proper footing and balance at all times.** This enables better control of the power tool in unexpected situations.
6. **Dress properly. Do not wear loose clothing or jewellery. Keep your hair and clothing away from moving parts.** Loose clothes, jewellery or long hair can be caught in moving parts.
7. **If devices are provided for the connection of dust extraction and collection facilities, ensure these are connected and properly used.** Use of dust collection can reduce dust-related hazards.
8. **Do not let familiarity gained from frequent use of tools allow you to become complacent and ignore tool safety principles.** A careless action can cause severe injury within a fraction of a second.
9. **Always wear protective goggles to protect your eyes from injury when using power tools. The goggles must comply with ANSI Z87.1 in the USA, EN 166 in Europe, or AS/NZS 1336 in Australia/New Zealand. In Australia/New Zealand, it is legally required to wear a face shield to protect your face, too.**

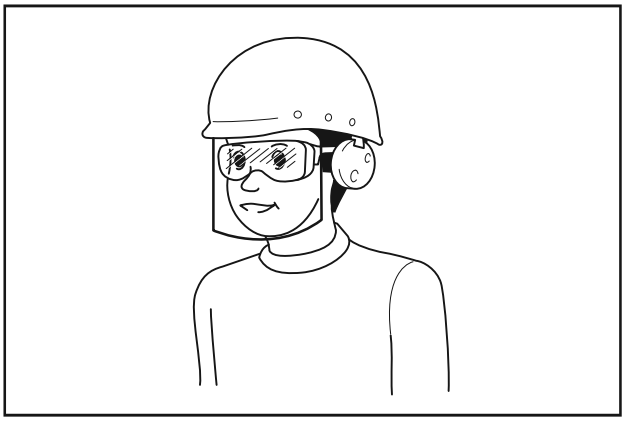

**It is an employer's responsibility to enforce the use of appropriate safety protective equipments by the tool operators and by other persons in the immediate working area.**

**Power tool use and care**

1. **Do not force the power tool. Use the correct power tool for your application.** The correct power tool will do the job better and safer at the rate for which it was designed.
2. **Do not use the power tool if the switch does not turn it on and off.** Any power tool that cannot be controlled with the switch is dangerous and must be repaired.
3. **Disconnect the plug from the power source and/or remove the battery pack, if detachable, from the power tool before making any adjustments, changing accessories, or storing power tools.** Such preventive safety measures reduce the risk of starting the power tool accidentally.
4. **Store idle power tools out of the reach of children and do not allow persons unfamiliar with the power tool or these instructions to operate the power tool.** Power tools are dangerous in the hands of untrained users.
5. **Maintain power tools and accessories. Check for misalignment or binding of moving parts, breakage of parts and any other condition that may affect the power tool's operation. If damaged, have the power tool repaired before use.** Many accidents are caused by poorly maintained power tools.
6. **Keep cutting tools sharp and clean.** Properly maintained cutting tools with sharp cutting edges are less likely to bind and are easier to control.
7. **Use the power tool, accessories and tool bits etc. in accordance with these instructions, taking into account the working conditions and the work to be performed.** Use of the power tool for operations different from those intended could result in a hazardous situation.
8. **Keep handles and grasping surfaces dry, clean and free from oil and grease.** Slippery handles and grasping surfaces do not allow for safe handling and control of the tool in unexpected situations.
9. **When using the tool, do not wear cloth work gloves which may be entangled.** The entanglement of cloth work gloves in the moving parts may result in personal injury.

**Battery tool use and care**

1. **Recharge only with the charger specified by the manufacturer.** A charger that is suitable for one type of battery pack may create a risk of fire when used with another battery pack.
2. **Use power tools only with specifically designated battery packs.** Use of any other battery packs may create a risk of injury and fire.
3. **When battery pack is not in use, keep it away from other metal objects, like paper clips, coins, keys, nails, screws or other small metal objects, that can make a connection from one terminal to another.** Shorting the battery terminals together may cause burns or a fire.
4. **Under abusive conditions, liquid may be ejected from the battery; avoid contact. If contact accidentally occurs, flush with water. If liquid contacts eyes, additionally seek medical help.** Liquid ejected from the battery may cause irritation or burns.
5. **Do not use a battery pack or tool that is damaged or modified.** Damaged or modified batteries may exhibit unpredictable behaviour resulting in fire, explosion or risk of injury.
6. **Do not expose a battery pack or tool to fire or excessive temperature.** Exposure to fire or temperature above 130 °C may cause explosion.
7. **Follow all charging instructions and do not charge the battery pack or tool outside the temperature range specified in the instructions.** Charging improperly or at temperatures outside the specified range may damage the battery and increase the risk of fire.

**Service**

1. **Have your power tool serviced by a qualified repair person using only identical replacement parts.** This will ensure that the safety of the power tool is maintained.
2. **Never service damaged battery packs.** Service of battery packs should only be performed by the manufacturer or authorized service providers.
3. **Follow instruction for lubricating and changing accessories.**

## Cordless inflator safety warnings

1. **When inflating objects, connect the air chuck, adapter, and valve tightly.** Otherwise, the object, hose, air chuck, or adapter may be damaged and you may be injured.
2. **Release air pressure slowly. When removing the hose after inflating objects, hold the object, hose, and air chuck firmly.** The object, air chuck, or adapter may bounce due to exhaust air and cause an injury.
3. **Do not inflate object beyond the maximum pressure of the object.** Otherwise, the tool or object may be damaged and you may be injured.
4. **Do not use the tool beyond the maximum output pressure of the tool.** Using the tool at output pressure greater than the maximum output pressure of the tool may burst the object or the tool.
5. **Inflate the objects intended to be inflated by the manufacturer only, such as tire, sport ball, or small floating tube.** Inflating other objects may damage them and cause an injury.

6. **When inflating objects, check the pressure gauge, status of the tool and object, and check that there is no air leak.** Otherwise, the tool or object may be damaged and cause an injury.
7. **When carrying the tool, hold the handle of the tool. Do not hold or pull the hose.** The tool may be damaged and cause an injury.
8. **After inflating objects, check the air pressure using a reliable and calibrated measuring equipment.** Use the pressure gauge of the tool only as a reference.
9. **After using the tool for 5 minutes continuously, stop using the tool for 5 minutes for cooling down. Do not use the tool beyond the continuous operating time allowed.** Otherwise, the tool may be damaged and cause an injury.
10. **Do not use the tool on sand or dusty surface.** Foreign objects may enter the inside of the tool and cause a malfunction.
11. **Do not point the outlet of the hose to yourself or others.** Objects may be blown away and cause an injury.
12. **Do not point the outlet of the hose to dust or similar.** The dust may be scattered and cause an injury.
13. **Do not inflate large capacity objects.** If you inflate a large capacity object, the tool may become extremely hot and could burn your skin.
14. **Do not touch the tool, hose, air chuck, or adapter right after inflating objects.** The metal parts may become extremely hot and could burn your skin.
15. **Do not use the tool with wet hands.**
16. **When folding the clamp of air chuck, be careful not to pinch your fingers between the air chuck and clamp.**
17. **Make sure that the hose is not entangled.** The entangled hose may cause loss of balance and cause an injury.
18. **Never leave the tool unattended when the hose is attached to the object or during operation.**
19. **Do not use the tool as a breathing device.**
20. **Do not use the tool to spray chemicals.** Your lungs may be damaged by inhaling toxic fumes.
21. **Operate the tool in an open area at least 50 cm away from any wall or object that could restrict air flow to ventilation openings.**
22. **Do not disassemble the tool.**
23. **Use only standard accessories provided by Makita.** The use of any other accessories or attachments might present a risk of injury to persons.

## Important safety instructions for battery cartridge

1. **Before using battery cartridge, read all instructions and cautionary markings on (1) battery charger, (2) battery, and (3) product using battery.**
2. **Do not disassemble battery cartridge.**
3. **If operating time has become excessively shorter, stop operating immediately. It may result in a risk of overheating, possible burns and even an explosion.**
4. **If electrolyte gets into your eyes, rinse them out with clear water and seek medical attention right away. It may result in loss of your eyesight.**
5. **Do not short the battery cartridge:**
   (1) **Do not touch the terminals with any conductive material.**
   (2) **Avoid storing battery cartridge in a container with other metal objects such as nails, coins, etc.**
   (3) **Do not expose battery cartridge to water or rain.**

   **A battery short can cause a large current flow, overheating, possible burns and even a breakdown.**
6. **Do not store the tool and battery cartridge in locations where the temperature may reach or exceed 50 °C (122 °F).**
7. **Do not incinerate the battery cartridge even if it is severely damaged or is completely worn out. The battery cartridge can explode in a fire.**
8. **Be careful not to drop or strike battery.**
9. **Do not use a damaged battery.**
10. **The contained lithium-ion batteries are subject to the Dangerous Goods Legislation requirements.** For commercial transports e.g. by third parties, forwarding agents, special requirement on packaging and labeling must be observed.
    For preparation of the item being shipped, consulting an expert for hazardous material is required. Please also observe possibly more detailed national regulations.
    Tape or mask off open contacts and pack up the battery in such a manner that it cannot move around in the packaging.
11. **Follow your local regulations relating to disposal of battery.**
12. **Use the batteries only with the products specified by Makita.** Installing the batteries to non-compliant products may result in a fire, excessive heat, explosion, or leak of electrolyte.

## SAVE THESE INSTRUCTIONS.

⚠*CAUTION:* **Only use genuine Makita batteries.** Use of non-genuine Makita batteries, or batteries that have been altered, may result in the battery bursting causing fires, personal injury and damage. It will also void the Makita warranty for the Makita tool and charger.

## Tips for maintaining maximum battery life

1. **Charge the battery cartridge before completely discharged. Always stop tool operation and charge the battery cartridge when you notice less tool power.**
2. **Never recharge a fully charged battery cartridge. Overcharging shortens the battery service life.**
3. **Charge the battery cartridge with room temperature at 10 °C - 40 °C (50 °F - 104 °F). Let a hot battery cartridge cool down before charging it.**

# FUNCTIONAL DESCRIPTION

**⚠*CAUTION:* Always be sure that the tool is switched off and the battery cartridge is removed before adjusting or checking function on the tool.**

## Installing or removing battery cartridge

**⚠*CAUTION:* Always switch off the tool before installing or removing of the battery cartridge.**

**⚠*CAUTION:* Hold the tool and the battery cartridge firmly when installing or removing battery cartridge.** Failure to hold the tool and the battery cartridge firmly may cause them to slip off your hands and result in damage to the tool and battery cartridge and a personal injury.

► **Fig.1:** **1.** Red indicator **2.** Button **3.** Battery cartridge

To remove the battery cartridge, slide it from the tool while sliding the button on the front of the cartridge.

To install the battery cartridge, align the tongue on the battery cartridge with the groove in the housing and slip it into place. Insert it all the way until it locks in place with a little click. If you can see the red indicator on the upper side of the button, it is not locked completely.

**⚠*CAUTION:* Always install the battery cartridge fully until the red indicator cannot be seen.** If not, it may accidentally fall out of the tool, causing injury to you or someone around you.

**⚠*CAUTION:* Do not install the battery cartridge forcibly.** If the cartridge does not slide in easily, it is not being inserted correctly.

## Indicating the remaining battery capacity

***Only for battery cartridges with the indicator***

► **Fig.2:** **1.** Indicator lamps **2.** Check button

Press the check button on the battery cartridge to indicate the remaining battery capacity. The indicator lamps light up for a few seconds.

| Indicator lamps | | Remaining capacity |
|---|---|---|
| ■ Lighted | □ Off | |
| ■ ■ ■ ■ | | 75% to 100% |
| ■ ■ ■ | □ | 50% to 75% |
| ■ ■ | □ □ | 25% to 50% |
| ■ | □ □ □ | 0% to 25% |

**NOTE:** Depending on the conditions of use and the ambient temperature, the indication may differ slightly from the actual capacity.

## Battery protection system

The tool is equipped with a battery protection system. This system automatically cuts off power to the motor to extend battery life.
The tool will automatically stop during operation if the tool and/or battery are placed under one of the following conditions:

**Overloaded:**
The tool is operated in a manner that causes it to draw an abnormally high current.
In this situation, turn the tool off and stop the application that caused the tool to become overloaded. Then turn the tool on to restart.
If the tool does not start, the battery is overheated. In this situation, let the battery cool before turning the tool on again.

**Low battery voltage:**
The remaining battery capacity is too low and the tool will not operate. If you turn the tool on, the motor runs again but stops soon. In this situation, remove and recharge the battery.

## Main power switch

**⚠*WARNING:* Always turn off the main power switch when not in use.**

**⚠*CAUTION:* When carrying the tool, turn off the main power switch.** Otherwise, pulling the switch trigger unintentionally may cause an injury.

► **Fig.3:** **1.** Main power switch

To turn on the tool, press the main power switch. To turn off the tool, press the main power switch again.

**NOTE:** This tool employs the auto power-off function. To avoid unintentional start up, the main power switch will automatically shut down when the switch trigger is not pulled for a certain period after the main power switch is turned on.

## Switch action

**⚠*WARNING:* Before installing the battery cartridge into the tool, always check to see that the switch trigger actuates properly and returns to the "OFF" position when released.**

► **Fig.4:** **1.** Switch trigger

To start the tool, simply pull the switch trigger. Release the switch trigger to stop.

## Pressure gauge

► **Fig.5:** **1.** Unit button **2.** Minus button **3.** Plus button

If the object to be inflated is connected to the tool, the air pressure of the object is displayed on the pressure gauge when you turn on the tool. If nothing is connected to the tool, the pressure gauge displays "0".
You can set the air pressure on the pressure gauge. To change the unit, press the unit button. To increase the pressure value, press the plus button. To decrease the pressure value, press the minus button. You can set the pressure value between 20 kPa and 830 kPa.

## Lighting up the front lamp

► **Fig.6:** **1.** Lamp **2.** Main power switch

> ⚠***CAUTION:*** **Do not look in the light or see the source of light directly.**

When you turn on the tool by pressing the main power switch, the lamp lights up. When you turn off the tool by pressing the main power switch, the lamp goes out.

> ***NOTICE:*** **When the tool is overheated, the lamp flickers. Cool down the tool fully before operating the tool again.**

> **NOTE:** Use a dry cloth to wipe the dirt off the lens of the lamp. Be careful not to scratch the lens of lamp, or it may lower the illumination.

## Storing adapter

► **Fig.7:** **1.** Sport ball needle **2.** Presta valve adapter **3.** Adapter holder

The adapters can be stored in the adapter holder of the tool. Insert the sport ball needle into the Presta valve adapter before attaching them to the adapter holder.

## Storing hose

► **Fig.8:** **1.** Hose holder **2.** Hose

The hose can be attached to the hose holder of the tool.

# OPERATION

## Using the English valve adapter

**1.** Unfold the air chuck clamp.

**2.** Insert the English valve adapter into the air chuck.

**3.** Fold the air chuck clamp firmly.

► **Fig.9:** **1.** English valve adapter **2.** Air chuck **3.** Air chuck clamp **4.** Valve stem

**4.** Attach the English valve adapter to the valve stem while opening the English valve adapter.

**5.** Turn on the tool.

**6.** Inflate the tire by pulling the switch trigger while checking the status of the tire.

> ***NOTICE:*** **When using the English valve adapter, the pressure gauge will not display an accurate value due to characteristics of the valve. When inflating a tire, do not use the value on the pressure gauge, but inflate it by checking the status of the tire.**
>
> **If the tool stops before the tire reaches the desired air pressure, adjust the pressure value, and then inflate the tire again.**

## Using the Schrader valve adapter

**1.** Unfold the air chuck clamp.

**2.** Attach the air chuck to the valve stem.

► **Fig.10:** **1.** Air chuck clamp **2.** Valve stem **3.** Air chuck

**3.** Fold the air chuck clamp firmly.

**4.** Turn on the tool, and then set the pressure value appropriate for the tire using the pressure gauge.

**5.** Keep pulling the switch trigger until the tool stops. The tire is inflated with the specified pressure.

## Using the Presta valve adapter

**1.** Loosen the locking nut on the valve stem.

► **Fig.11:** **1.** Locking nut

**2.** Unfold the air chuck clamp.

**3.** Attach the Presta valve adapter to the valve stem, and then attach the air chuck to the Presta valve adapter.

► **Fig.12:** **1.** Presta valve adapter **2.** Air chuck **3.** Air chuck clamp **4.** Valve stem

**4.** Fold the air chuck clamp firmly.

**5.** Turn on the tool, and then set the pressure value appropriate for the tire using the pressure gauge.

**6.** Keep pulling the switch trigger until the tool stops. The tire is inflated with the specified pressure.

**7.** Remove the air chuck and Presta valve adapter, and then tighten the locking nut.

## Using the sport ball needle or tapered adapter

You can inflate small items such as sport balls or floating tubes. To inflate sport balls, use the sport ball needle. To inflate floating tubes, use the tapered adapter.

**1.** Unfold the air chuck clamp.

**2.** Attach the sport ball needle or tapered adapter to the air chuck.

► **Fig.13:** **1.** Air chuck clamp **2.** Air chuck **3.** Sport ball needle **4.** Tapered adapter

**3.** Fold the air chuck clamp firmly.

**4.** Insert the sport ball needle or tapered adapter into the hole on the item.

**5.** Turn on the tool, and then set the appropriate pressure value using the pressure gauge.

> ***NOTICE:*** **When inflating a floating tube, the pressure gauge will not display an accurate value since the pressure of floating tube is less than 20 kPa. When inflating a floating tube, do not use the value on the pressure gauge, but inflate it by checking the status of the floating tube.**

**6.** Keep pulling the switch trigger until the tool stops. The item is inflated with the specified pressure.

# MAINTENANCE

> ⚠***CAUTION:*** **Always be sure that the tool is switched off and the battery cartridge is removed before attempting to perform inspection or maintenance.**

> ***NOTICE:*** **Never use gasoline, benzine, thinner, alcohol or the like. Discoloration, deformation or cracks may result.**

To maintain product SAFETY and RELIABILITY, repairs, any other maintenance or adjustment should be performed by Makita Authorized or Factory Service Centers, always using Makita replacement parts.

## 使用运动球充气针或锥形转接头

可以为运动球或小型浮艇等小型充气物品充气。为运动球充气时，请使用运动球充气针。为浮艇充气时，请使用锥形转接头。

**1.** 立起充气夹头锁柄。

**2.** 将运动球充气针或锥形转接头放入充气夹头。

► **图片13:** **1.** 充气夹头锁柄 **2.** 充气夹头 **3.** 运动球充气针 **4.** 锥形转接头

**3.** 牢牢压下充气夹头锁柄。

**4.** 将运动球充气针或锥形转接头插入充气孔中。

**5.** 打开工具，然后使用气压计设定合适的气压值。

**注意： 为浮艇充气时，由于浮艇的气压低于20 kPa，因此气压计无法准确显示气压值。为浮艇充气时，请勿依据压力计上的数值，应该通过浮艇状态判断气压。**

**6.** 扣住开关扳机直至工具停止。此时浮艇已达到指定气压。

# 保养

**⚠小心： 检查或保养工具之前，请务必关闭工具电源并取出电池组。**

**注意： 切勿使用汽油、苯、稀释剂、酒精或类似物品清洁工具。否则可能会导致工具变色、变形或出现裂缝。**

为了保证产品的安全与可靠性，维修、任何其他的维修保养或调节需由Makita（牧田）授权的或工厂维修服务中心完成。务必使用Makita（牧田）的替换部件。

Makita Europe N.V. Jan-Baptist Vinkstraat 2, 3070 Kortenberg, Belgium

Makita Corporation 3-11-8, Sumiyoshi-cho, Anjo, Aichi 446-8502 Japan

www.makita.com

MP100D-30L-2106
EN, FR, DE, IT, NL, ES, PT, DA, EL, TR, SV, NO, FI, LV, LT, ET, PL, HU, SK, CS, SL, SQ, BG, HR, MK, SR, RO, UK, RU, ZHCN
20181011