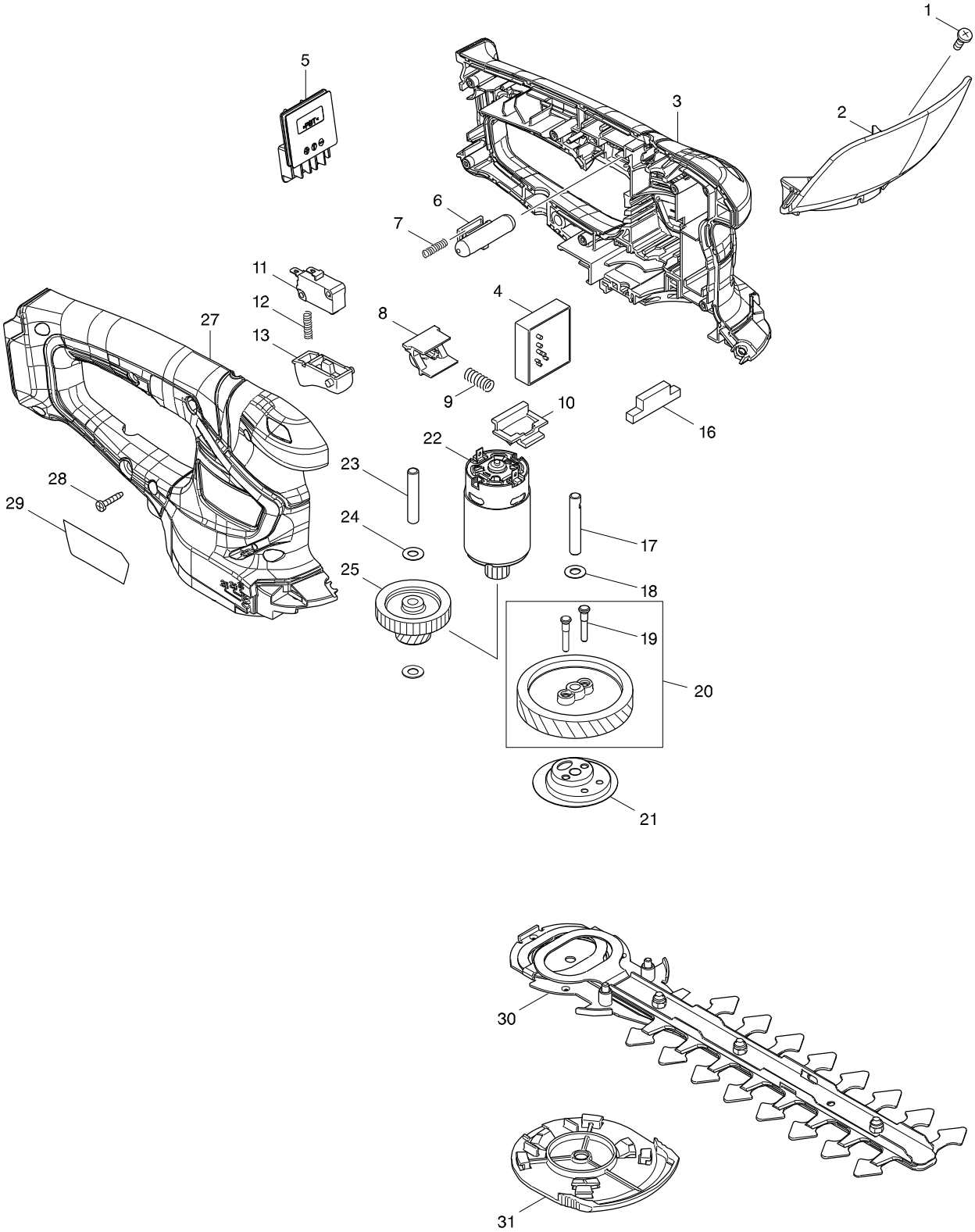Model No. UH201D 200MM CORDLESS HEDGE TRIMMER