Model No.HM001G CORDLESS DEMOLITION HAMMER

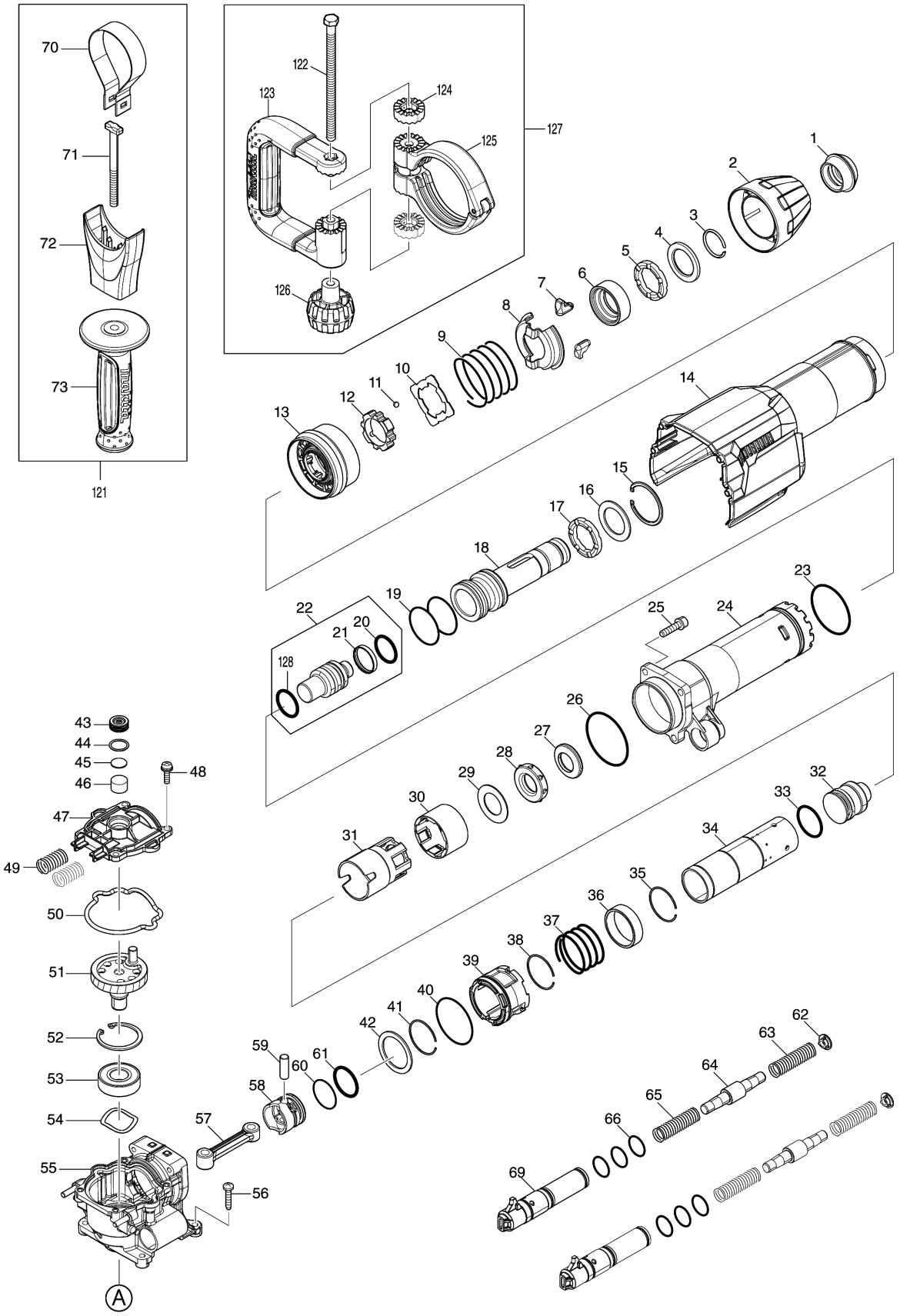

Model No.HM001G CORDLESS DEMOLITION HAMMER

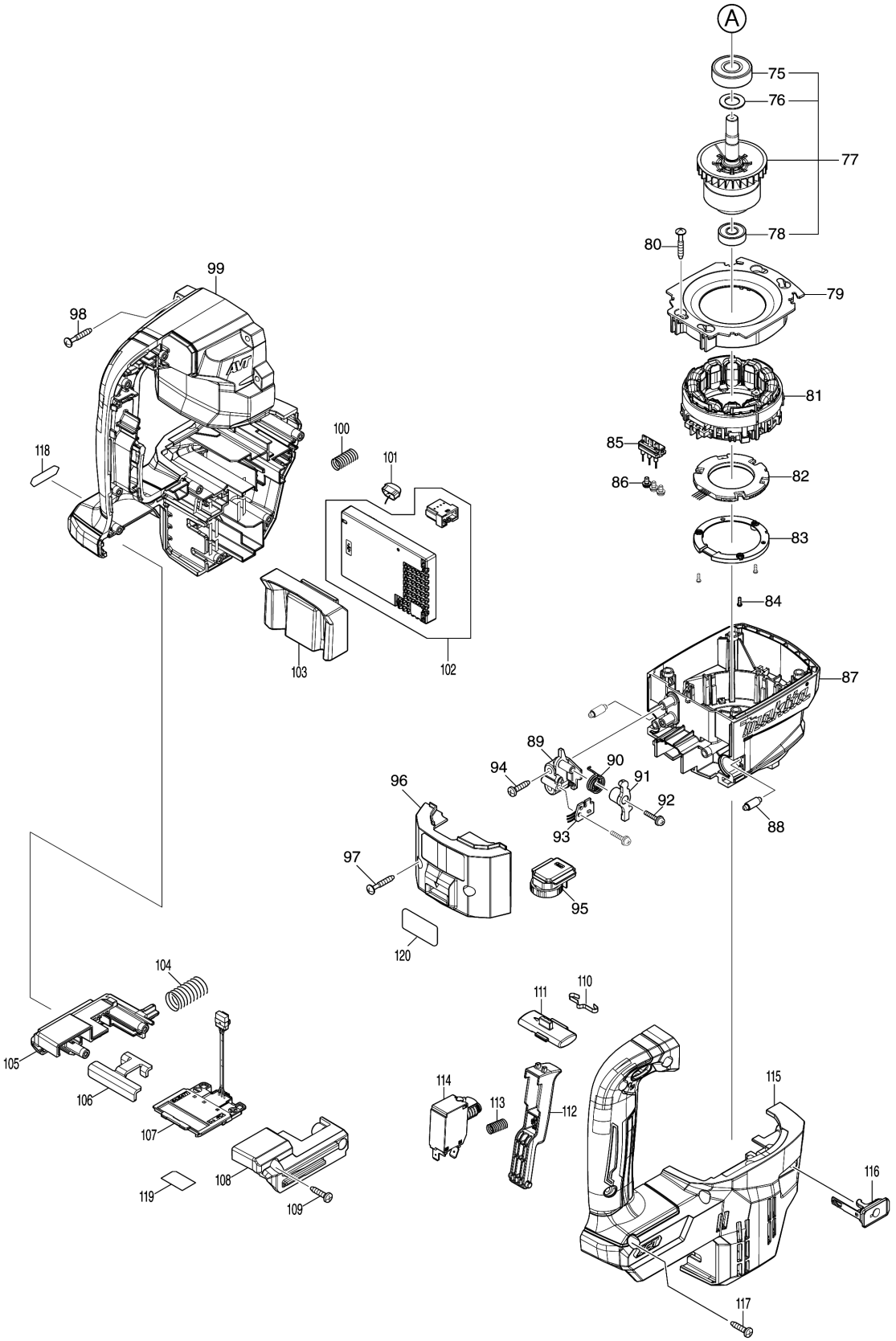

Model No.HM001G CORDLESS DEMOLITION HAMMER

Item	Parts No.	Description	I/C	QTY	New/Old	Opt. 1	Opt. 2	NOTE
001	286287-0	TOOL HOLDER CAP		1				
002	451432-8	CHUCK COVER		1				
003	231984-3	RING SPRING 25		1				
004	267272-2	FLAT WASHER 28		1				
005	424261-2	RUBBER RING 28		1				
006	331659-5	CHUCK RING		1				
007	310108-5	TOOL RETAINER		2				
008	346677-0	SPRING GUIDE		1				
009	233387-7	COMPRESSION SPRING 52		1				
010	346141-1	PLATE		1				
011	216002-8	STEEL BALL 4.8		4				
012	310145-9	LOCK RING		1				
013	451433-6	CHANGE RING		1				
014	412979-7	HOUSING COVER		1	*			
014-1	141F87-0	HOUSING COVER COMPLETE	<	1				
C10	422809-4	FILTER		1	*			
015	257960-9	RETAINING RING(INT) ROUND R-42		1				
016	267273-0	FLAT WASHER 29		1				
017	424261-2	RUBBER RING 28		1				
018	327778-3	TOOL HOLDER		1				
019	213789-3	O-RING 38		2				
020	213394-6	O RING 23		1				
021	213431-6	FLUORIDE RING 28		1				
022	136454-6	IMPACT BOLT ASSY		1				
D10		INC. 20,21,128						
023	213286-9	O-RING 48		1				
024	312A51-0	BARREL		1				
025	922341-3	HEX. SOCKET HEAD BOLT M6X25		4				
026	213656-2	O RING 53		1				
027	325732-1	RING 20		1				
028	424245-0	RUBBER RING 20		1				
029	267407-5	FLAT WASHER 23		1				
030	451639-6	GUIDE RING		1				
031	412986-0	SLIDE SLEEVE		1				
032	324388-7	STRIKER		1				
033	213958-6	O RING 24		1				
034	327694-9	CYLINDER 32		1				
035	233927-1	RING SPRING 34		1				
036	331660-0	RING 36		1				
037	233407-7	COMPRESSION SPRING 37		1				
038	233927-1	RING SPRING 34		1				

Please order the parts with part number. Print Date 7/29/2021

Model No.HM001G CORDLESS DEMOLITION HAMMER

Item	Parts No.	Description	I/C	QTY	New/Old	Opt. 1	Opt. 2	NOTE
039	318510-6	CYLINDER GUIDE		1				
040	213611-4	O RING 46		1				
041	233927-1	RING SPRING 34		1				
042	267079-6	FLAT WASHER 34		1				
043	419988-7	FILTER CAP		1	*			
043-1	424607-2	FILTER CAP	<	1				
044	213218-6	O RING 16		1	*			
045	423411-6	RUBBER PLATE		1	*			
046	443129-3	FILTER		1				
047	412978-9	CRANK CAP		1				
048	911233-1	PAN HEAD SCREW M5X20		4				
049	234282-4	COMPRESSION SPRING 12		2				
050	422647-4	SEAL RING		1				
051	327693-1	CRANK SHAFT 18.5		1				
052	962157-4	RETAINING RING R-40		1				
053	211490-4	BALL BEARING 6203LLU		1				
054	267825-7	WAVE WASHER 30		1				
055	136390-6	CRANK HOUSING ASSY		1				
C10	213678-2	OIL SEAL 12		1				
056	266041-8	TAPPING SCREW 5X25		4				
057	418350-3	CONNECTING ROD		1				
058	418349-8	PISTON		1				
059	268104-6	PIN 8		1				
060	213432-4	O RING 26		1				
061	213958-6	O RING 24		1				
062	412984-4	SPRING PLATE A		2				
063	234134-9	COMPRESSION SPRING 12		2				
064	325733-9	COUNTER WEIGHT		2	*			
064-1	327842-0	COUNTER WEIGHT	<	2				
065	234134-9	COMPRESSION SPRING 12		2				
066	213325-5	O RING 19		6	*			
066-1	213A09-1	O-RING 19	<	6				
069	140W77-2	HOLDER COMPLETE		2				
070	346140-3	GRIP SPRING 70		1				
071	266522-2	SQUARE BOLT M8X95		1				
072	418363-4	SIDE GRIP BASE 60		1				
073	158131-0	GRIP 36 COMPLETE		1				
075	211106-1	BALL BEARING 6201LLB		1				
076	253744-3	FLAT WASHER 12		1				
077	519642-4	ROTOR ASS'Y		1				
D10		INC. 75,76,78						
078	210005-4	BALL BEARING 608DDW		1				

Please order the parts with part number. Print Date 7/29/2021

Model No.HM001G CORDLESS DEMOLITION HAMMER

Item	Parts No.	Description	I/C	QTY	New/Old	Opt. 1	Opt. 2	NOTE
079	412983-6	BAFFLE PLATE		1				
080	265999-8	TAPPING SCREW 4X25		4				
081	629335-6	STATOR		1				
082	620D76-1	CONTROLLER B		1				
083	687B69-9	STOPPER		1				
084	266490-9	TAPPING SCREW PT 2X6		3				
085	632R64-0	LEAD UNIT		1				
086	652031-1	PAN HEAD SCREW M3X6		3				
087	412982-8	MOTOR HOUSING		1				
088	256380-4	SHOULDER PIN 4-6		2				
089	412985-2	BASE		1				
090	232643-2	TORSION SPRING 13		1				
091	140W48-9	LEVER COMPLETE		1				
092	263046-9	TAPPING SCREW 3X14		2				
093	620D75-3	SENSOR CIRCUIT		1				
094	266326-2	TAPPING SCREW 4X18		2				
095	620796-3	DIAL CIRCUIT		1	*			
095-1	620H67-6	DIAL CIRCUIT	<	1				
096	140W78-0	MOTOR HOUSING COVER COMPLETE		1				
C10	422564-8	SPONGE SHEET		1	*			
C11	422730-7	RUBBER SHEET	<	1				
097	265999-8	TAPPING SCREW 4X25		2				
098	265999-8	TAPPING SCREW 4X25		4				
099	183R90-7	HOUSING SET		1				
C10	422646-6	CAP 10		2				
C20	347755-9	GUARD RAIL		2				
D10		INC. 115						
100	232411-3	COMPRESSION SPRING 8		1				
101	620549-0	LED CIRCUIT		1				
102	620E09-2	CONTROLLER		1				
103	422642-4	CUSHION RUBBER		1				
104	232650-5	COMPRESSION SPRING 13		1				
105	183R85-0	BATTERY HOLDER SET		1				
C10	263005-3	RUBBER PIN 6		2				
D10		INC. 108						
106	346039-2	SUPPORT PLATE		1				
107	632P49-4	TERMINAL UNIT		1				
108	183R85-0	BATTERY HOLDER SET		1				
C10	263005-3	RUBBER PIN 6		2				
D10		INC. 105						
109	266326-2	TAPPING SCREW 4X18		2				
110	232152-1	LEAF SPRING		1				

Please order the parts with part number. Print Date 7/29/2021

Model No.HM001G CORDLESS DEMOLITION HAMMER

Item	Parts No.	Description	I/C	QTY	New/Old	Opt. 1	Opt. 2	NOTE
111	412981-0	TRIGGER LOCK		1				
112	412980-2	SWITCH LEVER		1				
113	232561-4	COMPRESSION SPRING 5		1				
114	651399-2	SWITCH C3JW-6B-PA		1				
115	183R90-7	HOUSING SET		1				
C10	422646-6	CAP 10		2				
C20	347755-9	GUARD RAIL		2				
D10		INC. 99						
116	140F99-0	CAP COMPLETE		1				
C10	213218-6	O RING 16		1	*			
C11	213A05-9	O-RING16	O	1				
C20	818H07-8	CAP LABEL		1				
117	266326-2	TAPPING SCREW 4X18		8				
118	8012U4-2	XGT LOGO LABEL		1				
119	857Y00-9	HM001G SERIAL NO. LABEL		1				
120	857X94-8	HM001G NAME PLATE		1				
121	135332-7	GRIP 36 ASSEMBLY		1				
D10		INC. 70-73						
128	213385-7	O RING 24		1				
A01	194683-7	GREASE VESSEL SET		1				
A02	443122-7	CLOTH		1				
A03	821838-8	PLASTIC CASE		1	*			
A03-1	141D88-6	PLASTIC CASE COMPLETE	<	1				
A05B	412393-7	BATTERY COVER		2				
A06B	191B26-6	BATTERY BL4040 SET		2				
A07B	***DC40RA	DC40RA FAST CHARGER		1				
D10		COMPO-PARTS						
B01	191N57-7	HAMMER SERVICE KIT		1				
C10	181490-7	HAMMER GREASE 30G		1				
D10		INC. 1,3,7,20,21,33,60,61						

Please order the parts with part number. Print Date 7/29/2021