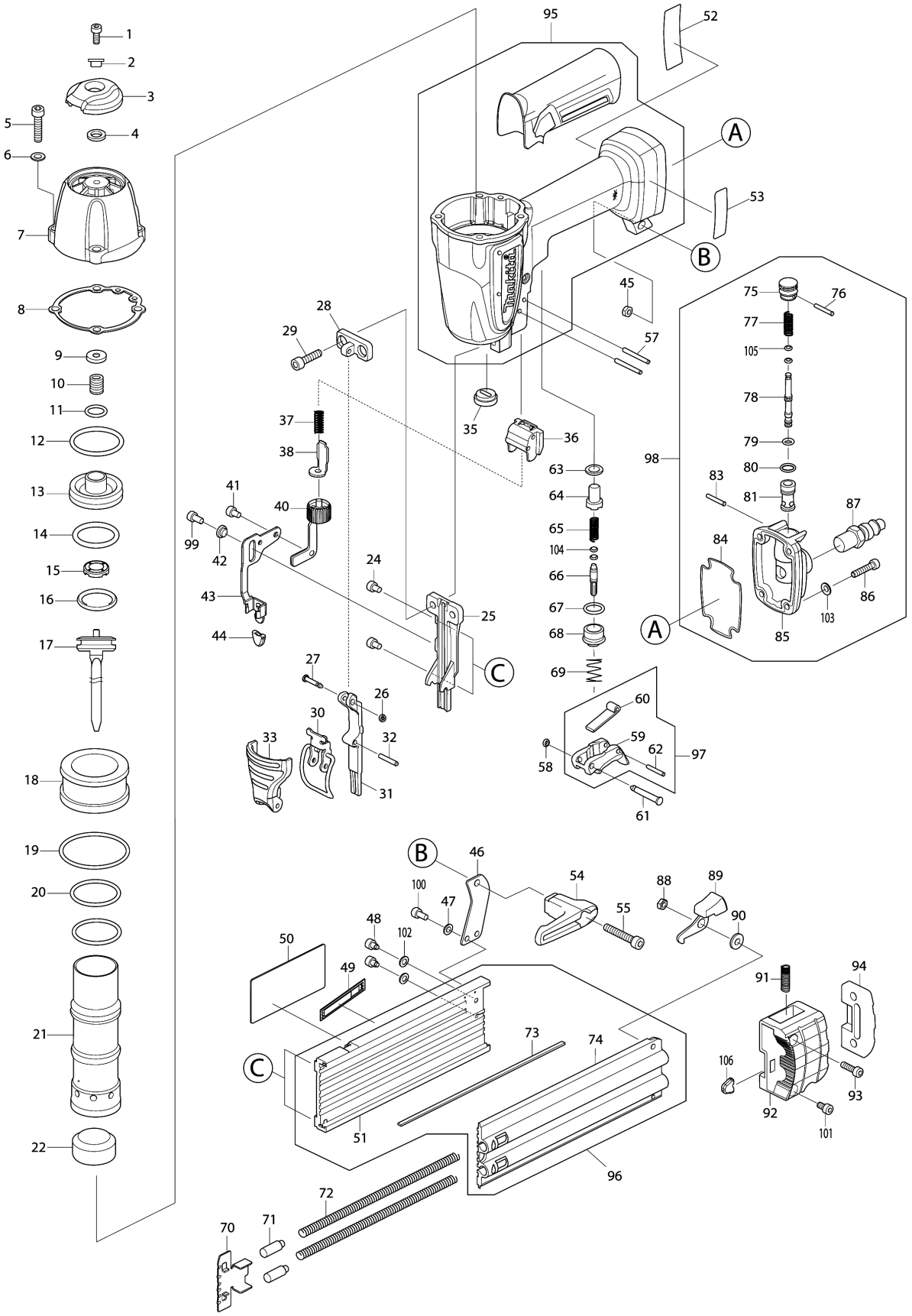Model No.AF506 PNEUMATIC BRAD NAILER